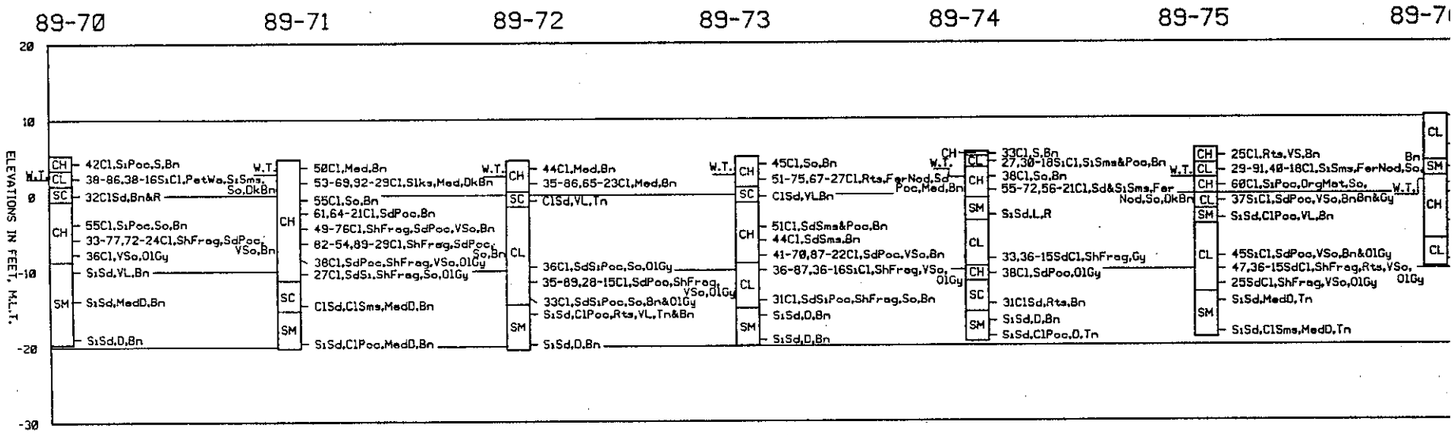

NOTES:

1. SOILS HAVE BEEN CLASSIFIED IN ACCORDANCE WITH MILITARY STANDARD 619B "UNIFIED SOIL CLASSIFICATION SYSTEM FOR ROADS, AIRFIELDS, EMBANKMENTS AND FOUNDATIONS." CONSISTENCY OF SOILS SUCH AS SOFT, MEDIUM, HARD, LOOSE, DENSE, ETC., ARE RELATIVE TERMS BASED ON ESTIMATED UNDISTURBED SHEAR STRENGTH OF THE MATERIAL AS DETERMINED BY VISUAL CLASSIFICATION POCKET PENETROMETER TESTS AND PENETRATION RESISTANCE DURING SAMPLING.
2. FIGURES TO THE RIGHT OF BORING LOGS ARE WATER CONTENTS IN PERCENT OF THE DRY WEIGHT. DRY DENSITY, LIQUID LIMIT, PLASTIC LIMIT, AND BAR LINEAR SHRINKAGE. (WC-UDW),(LL-PL),(B.L.S.)*
3. BORINGS 89-59 THRU 89-62, 89-70 THRU 89-75 89-78, 79-98, 77-343 THRU 77-345, AND 79-95 THRU 79-97, WERE DRILLED USING WET ROTARY DRILLING TECHNIQUES AND UNDISTURBED SAMPLES WERE RECOVERED WITH A 3-INCH DIAMETER THIN WALL SAMPLER WHERE COHESIVE MATERIALS WERE ENCOUNTERED. WHERE COHESIONLESS MATERIALS WERE ENCOUNTERED, DISTURBED SAMPLES WERE TAKEN WITH A SPLIT SPOON SAMPLER DURING PERFORMANCE OF STANDARD PENETRATION TESTING. BORINGS 89-63, 89-66, 89-68, 89-69, 89-76, AND 89-77 WERE DRILLED USING A MECHANICAL AUGER AND BORING 88-67 WAS DRILLED USING WET ROTARY TECHNIQUES TO OBTAIN DISTURBED SAMPLES.
4. WATER TABLES LEVELS SHOWN ON BORING LOGS WERE DETERMINED AFTER DRILLING BORINGS BY MEASURING THE TOP OF FLUID LEVELS IN THE BORINGS. IN BORINGS WHERE WET ROTARY DRILLING TECHNIQUES AND DRILLING MUD WERE USED TO DRILL THE HOLES, THE LEVEL OF DRILLING FLUIDS IN THE BORE HOLES MAY NOT HAVE STABILIZED TO THE LEVEL OF THE ACTUAL WATER TABLE. ADDITIONALLY, WATER TABLES IN THE FIELD ARE LIKELY TO FLUCTUATE DEPENDING ON TIDE AND WEATHER CONITIONS. THEREFORE, SOME VARIATION SHOULD BE ANTICIPATED BETWEEN WATER TABLES INDICATED AND WATER TABLES ENCOUNTERED IN THE FIELD.

VISUAL CLASSIFICATIONS

Bn Brown(ish)	Ol Olive
Cl Clay(ey)	Org Organic
Calc Calcerous	Part Parting(s)
D Dense	Pet Petrolum
Dec Decayed	Poc Pocket(s)
Dep Deposit(s)	R Red(ish)
Dk Dark	Rts Root(s)
Fer Ferrous	S Stiff
Frag Fragment(s)	Sd Sand(y)
Gr Green(ish)	Sh Shell(y)
Gra Grass	Si Silty
Gy Gray(ish)	Slks Slickensides
L Loose	Sm(s) Seams
Leav Leaves	So Soft
Lims Limestone	Tn Tan(ish)
Lt Light	V Very
Ly Layer(s)	Wa Waste
Mat Materials	Wd Wood(en)
Med Medium	Wea Weathered
Nod Nodules	Y Yellow(ish)

LOGS OF BORINGS
DISPOSAL AREA NO. 3

NOTE : * INDICATES AUGER BORINGS.

LABORATORY CLASSIFICATION

SP POORLY-GRADED SANDS OR GRAVELLY SANDS, LITTLE OR NO FINES.
SM SILTY SANDS, SAND-SILT MIXTURES.
CH INORGANIC CLAYS OF HIGH PLASTICITY, FAT CLAYS.
CL INORGANIC CLAYS OF LOW TO MEDIUM PLASICITY, LEAN CLAYS.
ML INORGANIC SILTS AND VERY FINE SANDS, WITH SLIGHT PLASTICITY.
SC CLAYEY SANDS, SAND-SILT MIXTURES.
PT PEAT AND OTHER HIGHLY ORGANIC SOILS.

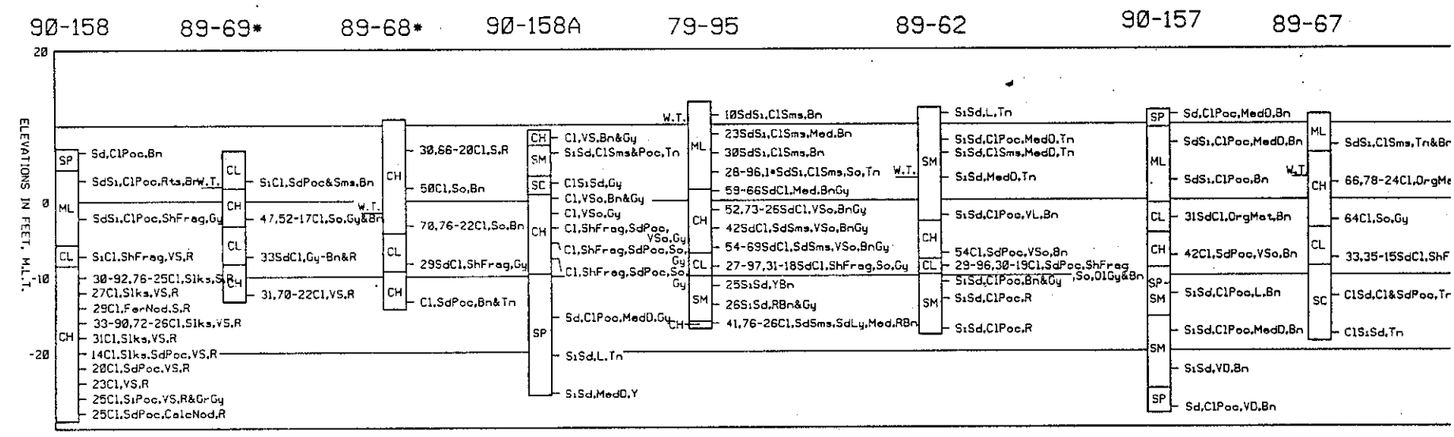

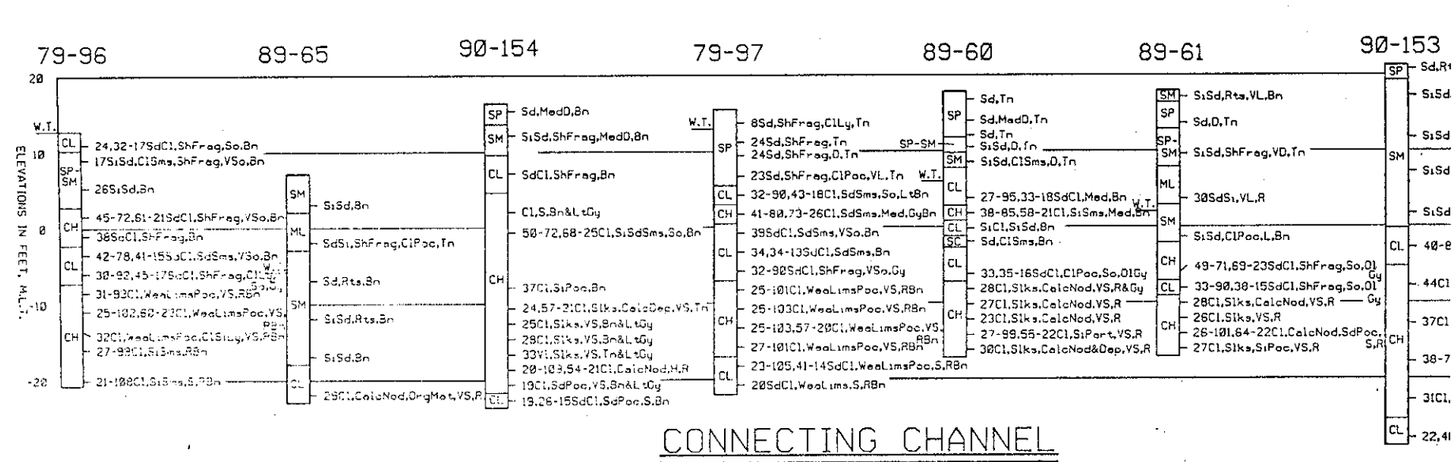

CONNECTING CHANNEL
LOGS OF BORINGS

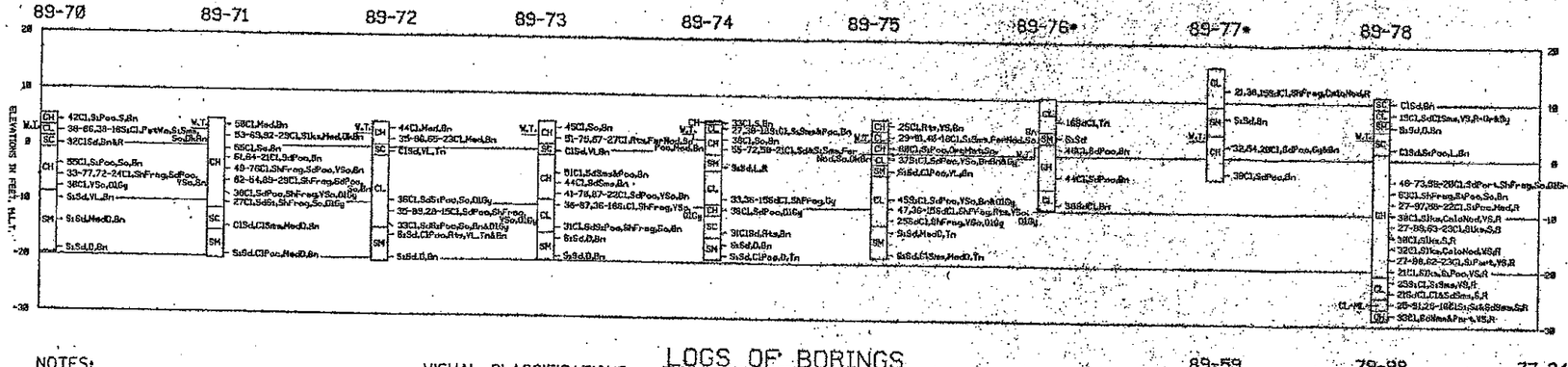

NOTES:

1. SOILS HAVE BEEN CLASSIFIED IN ACCORDANCE WITH MILITARY STANDARD 619B "UNIFIED SOIL CLASSIFICATION SYSTEM FOR ROADS, AIRFIELDS, EMBANKMENTS AND FOUNDATIONS." CONSISTENCY OF SOILS SUCH AS SOFT, MEDIUM, HARD, LOOSE, DENSE, ETC., ARE RELATIVE TERMS BASED ON ESTIMATED UNDISTURBED SHEAR STRENGTH OF THE MATERIAL AS DETERMINED BY VISUAL CLASSIFICATION POCKET PENETROMETER TESTS AND PENETRATION RESISTANCE DURING SAMPLING.
2. FIGURES TO THE RIGHT OF BORING LOGS ARE WATER CONTENTS IN PERCENT OF THE DRY WEIGHT, DRY DENSITY, LIQUID LIMIT, PLASTIC LIMIT, AND BAR LINEAR SHRINKAGE. (WC-LDDW).(LL-PL).(BL.S.)+
3. BORINGS 89-59 THRU 89-62, 89-70 THRU 89-75 89-78, 79-92, 77-343 THRU 77-345, AND 79-95 THRU 79-97, WERE DRILLED USING WET ROTARY DRILLING TECHNIQUES AND UNDISTURBED SAMPLES WERE RECOVERED WITH A 3-INCH DIAMETER THIN WALL SAMPLER WHERE COHESIVE MATERIALS WERE ENCOUNTERED. WHERE COHESIONLESS MATERIALS WERE ENCOUNTERED, DISTURBED SAMPLES WERE TAKEN WITH A SPLIT SPOON SAMPLER DURING PERFORMANCE OF STANDARD PENETRATION TESTING. BORINGS 89-63, 89-66, 89-68, 89-69, 89-76, AND 89-77 WERE DRILLED USING A MECHANICAL AUGER AND BORING 89-67 WAS DRILLED USING WET ROTARY TECHNIQUES TO OBTAIN DISTURBED SAMPLES.
4. WATER TABLES LEVELS SHOWN ON BORING LOGS WERE DETERMINED AFTER DRILLING BORINGS BY MEASURING THE TOP OF FLUID LEVELS IN THE BORINGS. IN BORINGS WHERE WET ROTARY DRILLING TECHNIQUES AND DRILLING MUD WERE USED TO DRILL THE HOLES, THE LEVEL OF DRILLING FLUIDS IN THE BORE HOLES MAY NOT HAVE STABILIZED TO THE LEVEL OF THE ACTUAL WATER TABLE. ADDITIONALLY, WATER TABLES IN THE FIELD ARE LIKELY TO FLUCTUATE DEPENDING ON TIDE AND WEATHER CONDITIONS. THEREFORE, SOME VARIATION SHOULD BE ANTICIPATED BETWEEN WATER TABLES INDICATED AND WATER TABLES ENCOUNTERED IN THE FIELD.

VISUAL CLASSIFICATIONS

Bn Brown(ish) Cl Clay(ey) Calc Calcareous D Dense Dec Decayed Dep Deposit(s) Dk Dark Fer Ferrous Frag Fragment(s) Gr Greenish(ish) Gra Grass Gy Gray(ish) L Loose Lgy Leaves Lime Limestone Lt Light Ly Layer(s) Mat Material(s) Med Medium Red Reddish Ol Olive Org Organic Part Partingd(s) Pet Petroleum Poc Pocket(s) R Rock(ish) Rts Root(s) S Stiff Sd Sand(y) Sh Shell(y) Si Silty Slks Slickensides Sm(s) Seam(s) So Soft Tn Tan(ish) V Very Wg Wood(en) Wea Weathered Y Yellow(ish)

LABORATORY CLASSIFICATION

SP POORLY-GRADED SANDS OR GRAVELLY SANDS, LITTLE OR NO FINES.
SM SILTY SANDS, SAND-SILT MIXTURES.
CH INORGANIC CLAYS OF HIGH PLASTICITY, FAT CLAYS.
CL INORGANIC CLAYS OF LOW TO MEDIUM PLASICITY, LEAN CLAYS.
ML INORGANIC SILTS AND VERY FINE SANDS, WITH SLIGHT PLASTICITY.
SC CLAYEY SANDS, SAND-SILT MIXTURES.
PT PEAT AND OTHER HIGHLY ORGANIC SOILS.

LOGS OF BORINGS
DISPOSAL AREA NO. 3

NOTE : * INDICATES AUGER BORINGS.

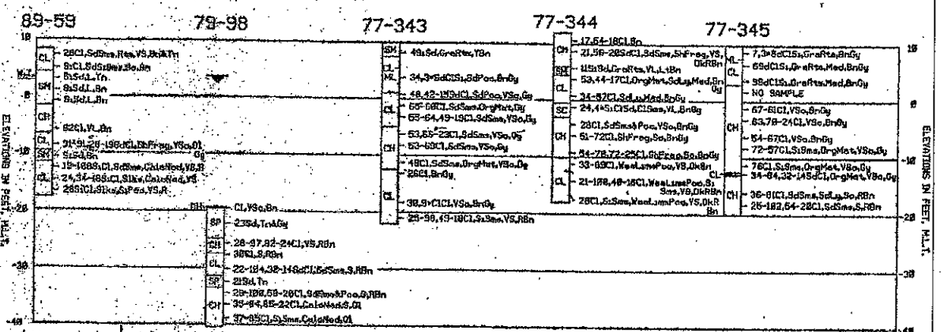

DIVERSION DAM
LOGS OF BORINGS

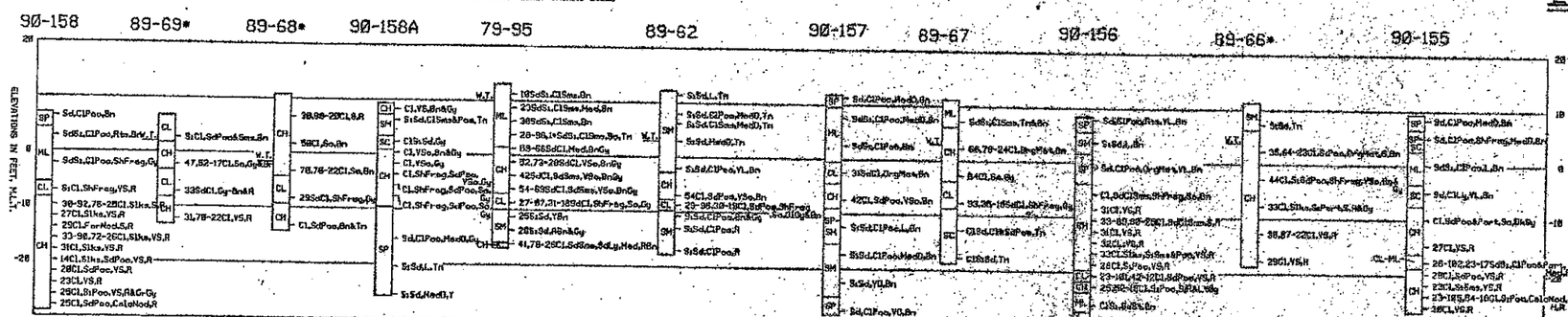

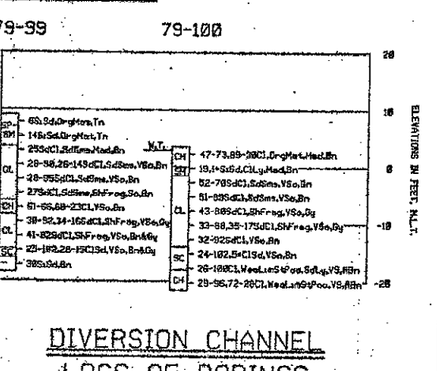

DIVERSION CHANNEL
LOGS OF BORINGS

NOTE: APPROXIMATE MAXIMUM DEPTH OF PREVIOUS DREDGING IS TO EL. -21.0 M.L.T.

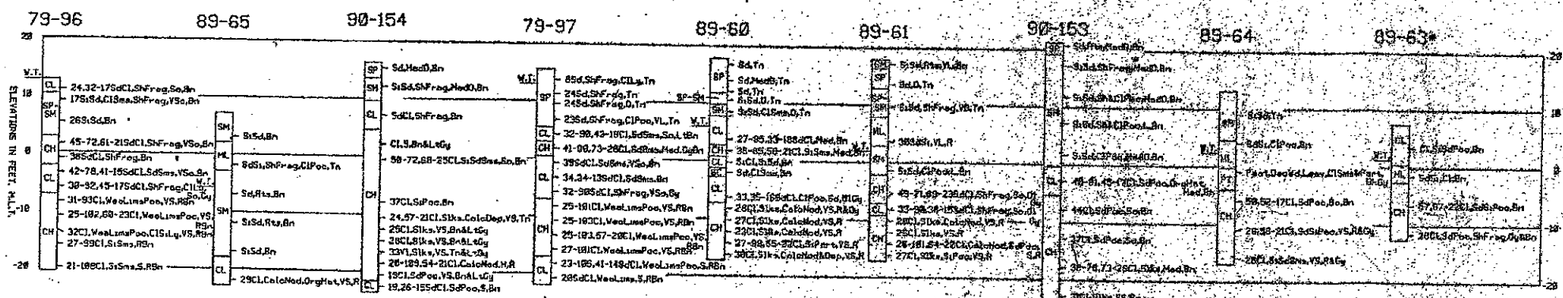

CONNECTING CHANNEL
LOGS OF BORINGS

REVISION	DATE	DESCRIPTION	BY

OFFICE OF THE DISTRICT ENGINEER
U.S. ARMY ENGINEER DISTRICT, GALVESTON
CORPS OF ENGINEERS
GALVESTON, TEXAS

COLORADO RIVER AND TRIBUTARIES, TEXAS
MOUTH OF COLORADO RIVER
DIVERSION DAM AND NAVIGATION (CONNECTING) CHANNEL

LOGS OF BORINGS

DRAWN BY
TRACED BY
CHECKED BY
SUBMITTED BY
APPROVED
DATE FEBRUARY 1991
SCALE AS SHOWN
DRAWING NUMBER F-1

Prepared under the direction of Brink P. Miller, Col., C.E., Commanding

INVITATION NO. DACW64-03-B-00

US Army of Engine
Galveston D

Date: Rev.
Scale: AS SHOWN
Approved Recommended:
DAVID B. CAMPBELL, P.E.
Chief, Engineering Division

Drawn by: X
Designed by: X
Checked by: X
Submitted by: X
MOHAMED M. HUSSAIN, P.E.
Project Manager

U.S. ARMY ENGINEER DISTRICT, GALVESTON
CORPS OF ENGINEERS
GALVESTON, TEXAS

PREPARED UNDER THE DIRECTION OF

PROJECT INFORMATION & LINES PROVIDED

SHEET TITLE

Drawing
X-00
Sheet of
File No.

...\Colo\Mouth of Colorado\F.dgn 05/20/2003 03:13:21 PM