McClelland consultants

BORING NUMBER	SAMPLE NUMBER/TYPE	SAMPLE DEPTH (FT)	VISUAL CLASSIFICATION	UNIFIED SOIL CLASSIFICATION	MOISTURE CONTENT (%)	UNIT DRY WEIGHT (PCF)	SPECIFIC GRAVITY OF SOLIDS	LIQUID LIMIT	PLASTIC LIMIT	BAR LINEAR SHRINKAGE (%)	PERCENT FINER BY WEIGHT (ABBEVIATED MECHANICAL SIEVE ANALYSIS) 3/8"	#4	#10	#40	#200	COMPLETE MECHANICAL ANALYSIS	HYDROMETER ANALYSIS	STANDARD COMPACTION TEST	MODIFIED COMPACTION TEST	UNDRAINED SHEAR STRENGTH(KSF)*	TORVANE SHEAR (KSF)
89-68	1J	3-5	Stiff red clay	CH	30			66	20												
	2J	8-10	Soft brown clay	CH	50																
	3J	13-15	Soft brown clay	CH	70			76	22												
	4J	18-20	Gray sandy-clay w/ shell fragments	CL	29																
	5J	23-25	Brown and tan clay w/ sand pockets	CH																	
89-69	1J	3-5	Brown silty-clay w/ sand pockets and seams	CL										100	61						
	2J	8-10	Soft gray and brown clay	CH	47			52	17				100	99	74						
	3J	13-15	Gray brown and red sandy-clay	CL	33																
	4J	18-20	Very stiff red clay	CH	31			70	22												
89-70	1Q	0-2	Stiff brown clay w/ silt pockets	CH	42																
	2Q	2-4	Soft dark brown silty-clay w/ ferrous and petrowaste and silty seams	CL	38	86		38	16				100	99	9.6					0.3	0.3
	3J	4.5-6	Brown and red clayey-sand and free water.	SC	32								100	99	38						
	4Q	8-10	Soft brown clay w/ silt pockets	CH	55																0.3
	5Q	10-12	Very soft brown clay w/ shell fragments and sand pockets	CH	33	77		72	24				100	96	70					0.2	0.2
	6Q	12-14	Very soft olive gray clay	CH	36																0.2
	7J	14.5-16	Brown silty fine sand	SM										100	50						
	8J	18.5-20	Brown silty fine sand	SM																	
	9J	23.5-25	Brown silty fine sand	SM																	

*Based on Unconfined Compression Test Results

SUMMARY OF TEST RESULTS
Disposal Area No. 3
Mouth of Colorado River Project
Matagorda, Texas

PLATE 6

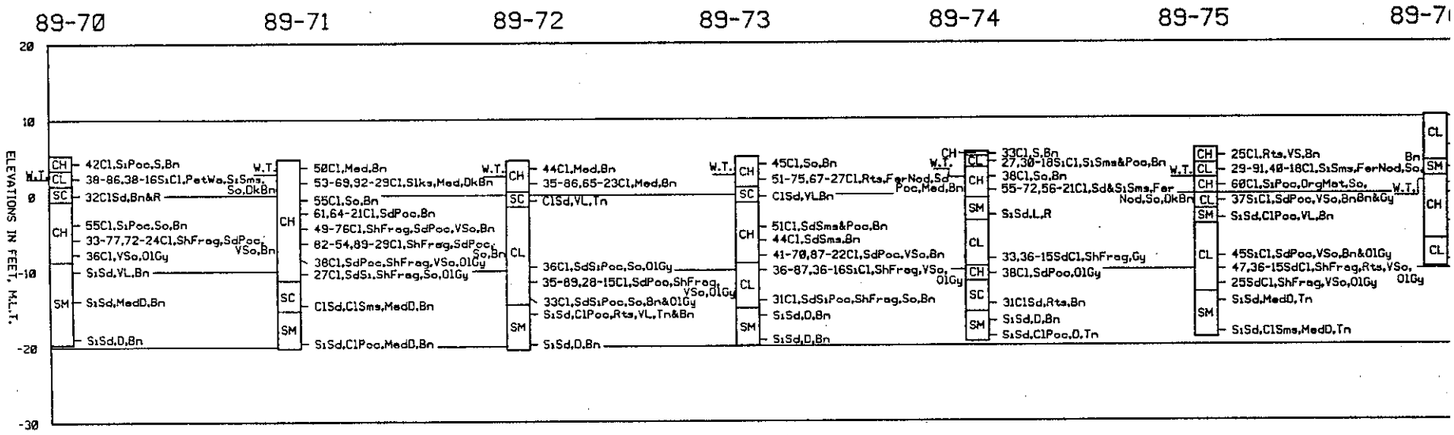

NOTES:

1. SOILS HAVE BEEN CLASSIFIED IN ACCORDANCE WITH MILITARY STANDARD 619B "UNIFIED SOIL CLASSIFICATION SYSTEM FOR ROADS, AIRFIELDS, EMBANKMENTS AND FOUNDATIONS." CONSISTENCY OF SOILS SUCH AS SOFT, MEDIUM, HARD, LOOSE, DENSE, ETC., ARE RELATIVE TERMS BASED ON ESTIMATED UNDISTURBED SHEAR STRENGTH OF THE MATERIAL AS DETERMINED BY VISUAL CLASSIFICATION POCKET PENETROMETER TESTS AND PENETRATION RESISTANCE DURING SAMPLING.
2. FIGURES TO THE RIGHT OF BORING LOGS ARE WATER CONTENTS IN PERCENT OF THE DRY WEIGHT. DRY DENSITY, LIQUID LIMIT, PLASTIC LIMIT, AND BAR LINEAR SHRINKAGE. (WC-UDW),(LL-PL),(B.L.S.)*
3. BORINGS 89-59 THRU 89-62, 89-70 THRU 89-75 89-78, 79-98, 77-343 THRU 77-345, AND 79-95 THRU 79-97, WERE DRILLED USING WET ROTARY DRILLING TECHNIQUES AND UNDISTURBED SAMPLES WERE RECOVERED WITH A 3-INCH DIAMETER THIN WALL SAMPLER WHERE COHESIVE MATERIALS WERE ENCOUNTERED. WHERE COHESIONLESS MATERIALS WERE ENCOUNTERED, DISTURBED SAMPLES WERE TAKEN WITH A SPLIT SPOON SAMPLER DURING PERFORMANCE OF STANDARD PENETRATION TESTING. BORINGS 89-63, 89-66, 89-68, 89-69, 89-76, AND 89-77 WERE DRILLED USING A MECHANICAL AUGER AND BORING 88-67 WAS DRILLED USING WET ROTARY TECHNIQUES TO OBTAIN DISTURBED SAMPLES.
4. WATER TABLES LEVELS SHOWN ON BORING LOGS WERE DETERMINED AFTER DRILLING BORINGS BY MEASURING THE TOP OF FLUID LEVELS IN THE BORINGS. IN BORINGS WHERE WET ROTARY DRILLING TECHNIQUES AND DRILLING MUD WERE USED TO DRILL THE HOLES, THE LEVEL OF DRILLING FLUIDS IN THE BORE HOLES MAY NOT HAVE STABILIZED TO THE LEVEL OF THE ACTUAL WATER TABLE. ADDITIONALLY, WATER TABLES IN THE FIELD ARE LIKELY TO FLUCTUATE DEPENDING ON TIDE AND WEATHER CONITIONS. THEREFORE, SOME VARIATION SHOULD BE ANTICIPATED BETWEEN WATER TABLES INDICATED AND WATER TABLES ENCOUNTERED IN THE FIELD.

VISUAL CLASSIFICATIONS

Bn Brown(ish)	Ol Olive
Cl Clay(ey)	Org Organic
Calc Calcerous	Part Parting(s)
D Dense	Pet Petrolum
Dec Decayed	Poc Pocket(s)
Dep Deposit(s)	R Red(ish)
Dk Dark	Rts Root(s)
Fer Ferrous	S Stiff
Frag Fragment(s)	Sd Sand(y)
Gr Green(ish)	Sh Shell(y)
Gra Grass	Si Silty
Gy Gray(ish)	Slks Slickensides
L Loose	Sm(s) Seams
Leav Leaves	So Soft
Lims Limestone	Tn Tan(ish)
Lt Light	V Very
Ly Layer(s)	Wa Waste
Mat Materials	Wd Wood(en)
Med Medium	Wea Weathered
Nod Nodules	Y Yellow(ish)

LOGS OF BORINGS
DISPOSAL AREA NO. 3

NOTE : * INDICATES AUGER BORINGS.

LABORATORY CLASSIFICATION

SP POORLY-GRADED SANDS OR GRAVELLY SANDS, LITTLE OR NO FINES.
SM SILTY SANDS, SAND-SILT MIXTURES.
CH INORGANIC CLAYS OF HIGH PLASTICITY, FAT CLAYS.
CL INORGANIC CLAYS OF LOW TO MEDIUM PLASICITY, LEAN CLAYS.
ML INORGANIC SILTS AND VERY FINE SANDS, WITH SLIGHT PLASTICITY.
SC CLAYEY SANDS, SAND-SILT MIXTURES.
PT PEAT AND OTHER HIGHLY ORGANIC SOILS.

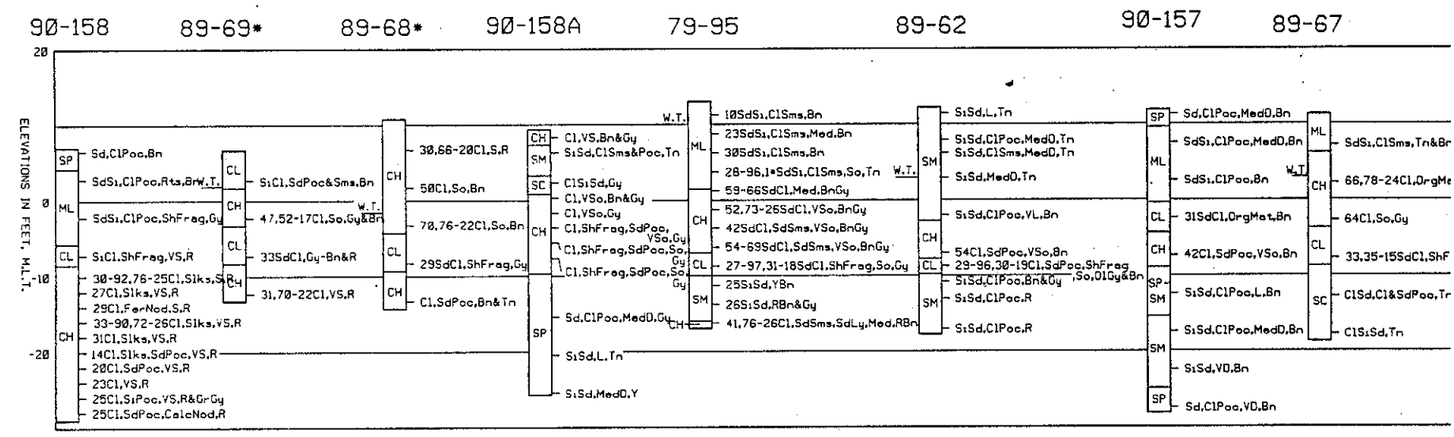

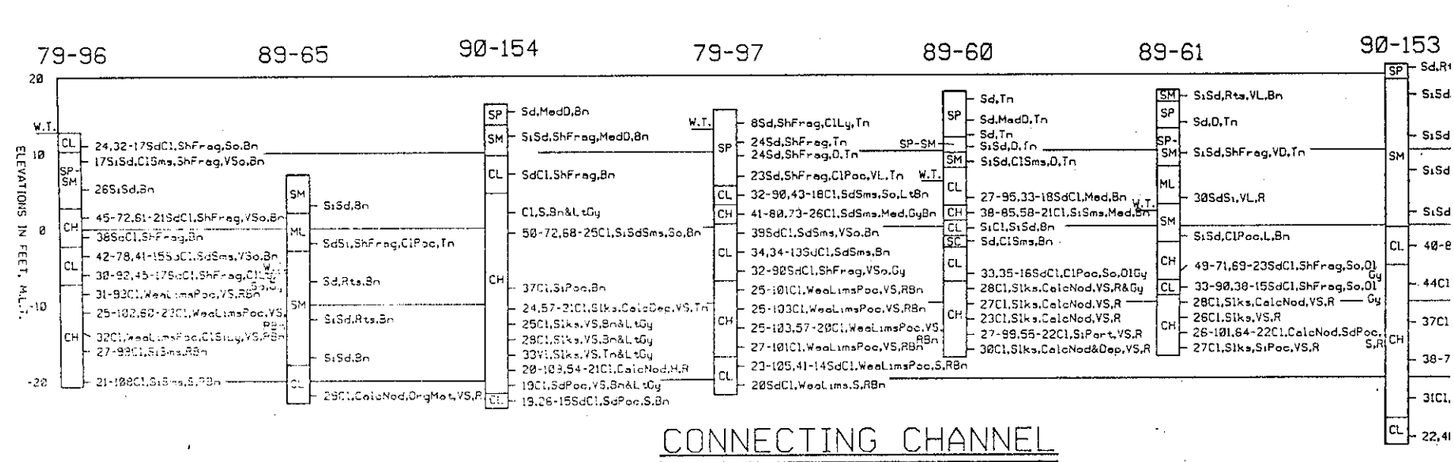

CONNECTING CHANNEL
LOGS OF BORINGS

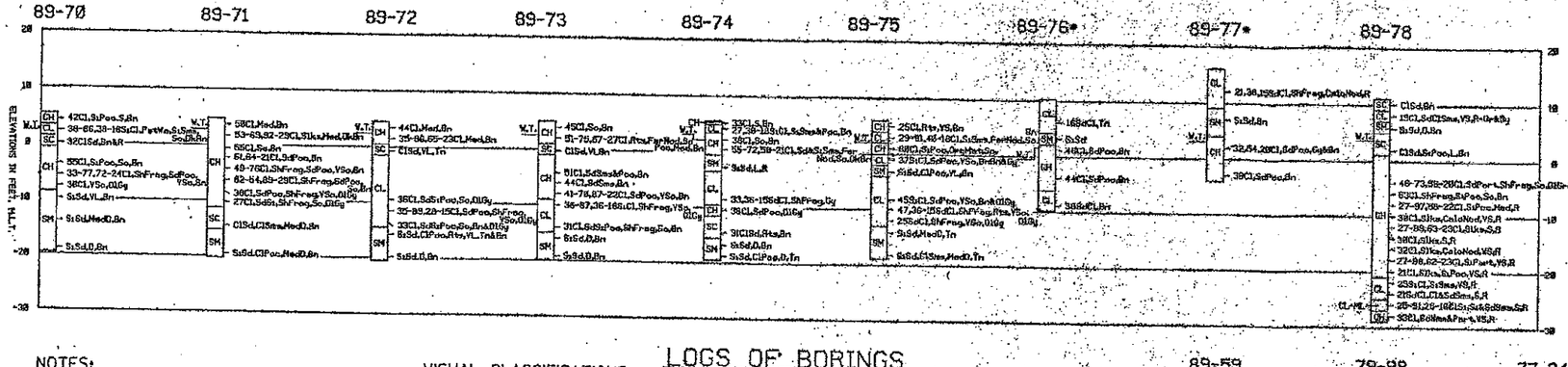

NOTES:

1. SOILS HAVE BEEN CLASSIFIED IN ACCORDANCE WITH MILITARY STANDARD 619B "UNIFIED SOIL CLASSIFICATION SYSTEM FOR ROADS, AIRFIELDS, EMBANKMENTS AND FOUNDATIONS." CONSISTENCY OF SOILS SUCH AS SOFT, MEDIUM, HARD, LOOSE, DENSE, ETC., ARE RELATIVE TERMS BASED ON ESTIMATED UNDISTURBED SHEAR STRENGTH OF THE MATERIAL AS DETERMINED BY VISUAL CLASSIFICATION POCKET PENETROMETER TESTS AND PENETRATION RESISTANCE DURING SAMPLING.
2. FIGURES TO THE RIGHT OF BORING LOGS ARE WATER CONTENTS IN PERCENT OF THE DRY WEIGHT, DRY DENSITY, LIQUID LIMIT, PLASTIC LIMIT, AND BAR LINEAR SHRINKAGE. (WC-LDDW).(LL-PL).(BL.S.)+
3. BORINGS 89-59 THRU 89-62, 89-70 THRU 89-75 89-78, 79-92, 77-343 THRU 77-345, AND 79-95 THRU 79-97, WERE DRILLED USING WET ROTARY DRILLING TECHNIQUES AND UNDISTURBED SAMPLES WERE RECOVERED WITH A 3-INCH DIAMETER THIN WALL SAMPLER WHERE COHESIVE MATERIALS WERE ENCOUNTERED. WHERE COHESIONLESS MATERIALS WERE ENCOUNTERED, DISTURBED SAMPLES WERE TAKEN WITH A SPLIT SPOON SAMPLER DURING PERFORMANCE OF STANDARD PENETRATION TESTING. BORINGS 89-63, 89-66, 89-68, 89-69, 89-76, AND 89-77 WERE DRILLED USING A MECHANICAL AUGER AND BORING 89-67 WAS DRILLED USING WET ROTARY TECHNIQUES TO OBTAIN DISTURBED SAMPLES.
4. WATER TABLES LEVELS SHOWN ON BORING LOGS WERE DETERMINED AFTER DRILLING BORINGS BY MEASURING THE TOP OF FLUID LEVELS IN THE BORINGS. IN BORINGS WHERE WET ROTARY DRILLING TECHNIQUES AND DRILLING MUD WERE USED TO DRILL THE HOLES, THE LEVEL OF DRILLING FLUIDS IN THE BORE HOLES MAY NOT HAVE STABILIZED TO THE LEVEL OF THE ACTUAL WATER TABLE. ADDITIONALLY, WATER TABLES IN THE FIELD ARE LIKELY TO FLUCTUATE DEPENDING ON TIDE AND WEATHER CONDITIONS. THEREFORE, SOME VARIATION SHOULD BE ANTICIPATED BETWEEN WATER TABLES INDICATED AND WATER TABLES ENCOUNTERED IN THE FIELD.

VISUAL CLASSIFICATIONS

Bn Brown(ish) Cl Clay(ey) Calc Calcareous D Dense Dec Decayed Dep Deposit(s) Dk Dark Fer Ferrous Frag Fragment(s) Gr Greenish(ish) Gra Grass Gy Gray(ish) L Loose Lgy Leaves Lime Limestone Lt Light Ly Layer(s) Mat Material(s) Med Medium Red Reddish Ol Olive Org Organic Part Partingd(s) Pet Petroleum Poc Pocket(s) R Rock(ish) Rts Root(s) S Stiff Sd Sand(y) Sh Shell(y) Si Silty Slks Slickensides Sm(s) Seam(s) So Soft Tn Tan(ish) V Very Wg Wood(en) Wea Weathered Y Yellow(ish)

LABORATORY CLASSIFICATION

SP POORLY-GRADED SANDS OR GRAVELLY SANDS, LITTLE OR NO FINES.
SM SILTY SANDS, SAND-SILT MIXTURES.
CH INORGANIC CLAYS OF HIGH PLASTICITY, FAT CLAYS.
CL INORGANIC CLAYS OF LOW TO MEDIUM PLASICITY, LEAN CLAYS.
ML INORGANIC SILTS AND VERY FINE SANDS, WITH SLIGHT PLASTICITY.
SC CLAYEY SANDS, SAND-SILT MIXTURES.
PT PEAT AND OTHER HIGHLY ORGANIC SOILS.

LOGS OF BORINGS
DISPOSAL AREA NO. 3

NOTE : * INDICATES AUGER BORINGS.

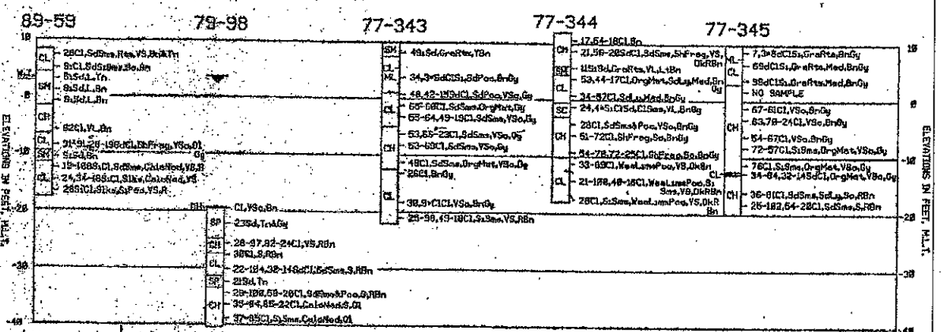

DIVERSION DAM
LOGS OF BORINGS

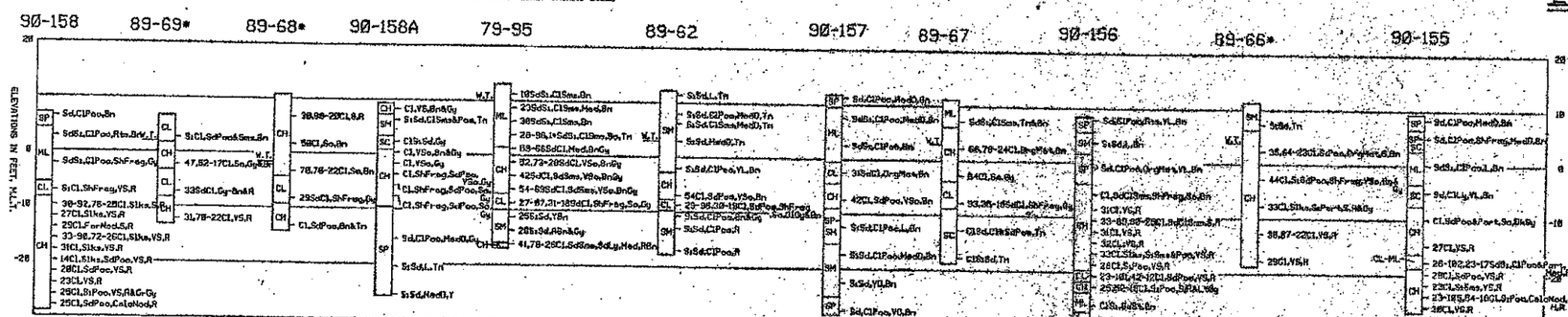

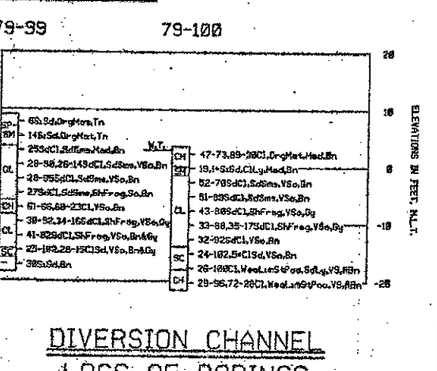

DIVERSION CHANNEL
LOGS OF BORINGS

NOTE: APPROXIMATE MAXIMUM DEPTH OF PREVIOUS DREDGING IS TO EL. -21.0 M.L.T.

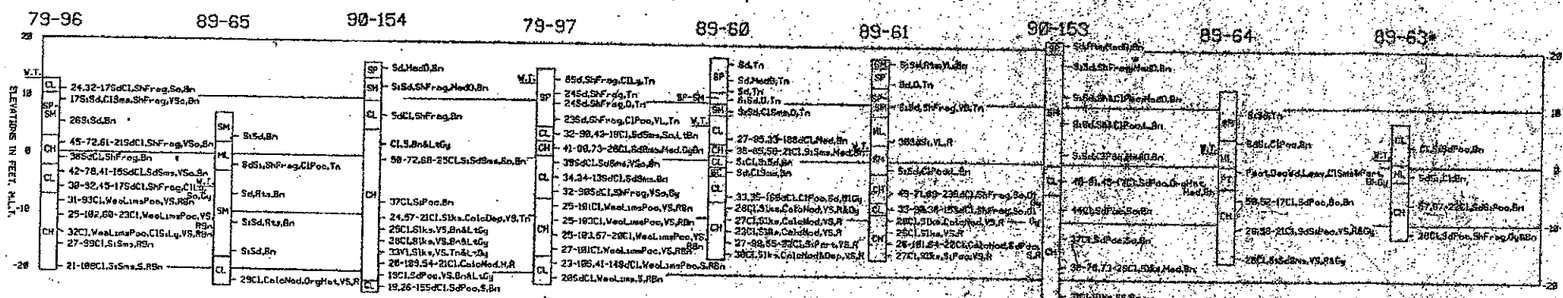

CONNECTING CHANNEL
LOGS OF BORINGS

REVISION	DATE	DESCRIPTION	BY

OFFICE OF THE DISTRICT ENGINEER
U.S. ARMY ENGINEER DISTRICT, GALVESTON
CORPS OF ENGINEERS
GALVESTON, TEXAS

COLORADO RIVER AND TRIBUTARIES, TEXAS
MOUTH OF COLORADO RIVER
DIVERSION DAM AND NAVIGATION (CONNECTING) CHANNEL

LOGS OF BORINGS

DRAWN BY
TRACED BY
CHECKED BY
SUBMITTED BY
APPROVED
DATE FEBRUARY 1991
SCALE AS SHOWN
DRAWING NUMBER F-1

Prepared under the direction of Brink P. Miller, Col., C.E., Commanding

INVITATION NO. DACW64-03-B-00

US Army of Engine
Galveston D

Date: Rev.
Scale: AS SHOWN
Approved Recommended:
DAVID B. CAMPBELL, P.E.
Chief, Engineering Division

Drawn by: X
Designed by: X
Checked by: X
Submitted by: X
MOHAMED M. HUSSAIN, P.E.
Project Manager

U.S. ARMY ENGINEER DISTRICT, GALVESTON
CORPS OF ENGINEERS
GALVESTON, TEXAS

PREPARED UNDER THE DIRECTION OF

PROJECT INFORMATION & LINES PROVIDED

SHEET TITLE

Drawing
X-00
Sheet of
File No.

...\Colo\Mouth of Colorado\F.dgn 05/20/2003 03:13:21 PM